OMB Approval 2700-0042

AMENDMENT OF SOLICITATION/MODIFICATION OF CONTRACT

1. CONTRACT ID CODE	PAGE	OF PAGES
	1	15

2. AMENDMENT/MODIFICATION NO.	3. EFFECTIVE DATE	4. REQUISITION/PURCHASE REQ. NO.	5. PROJECT NO. *(If applicable)*
18	8/10/06	N/A	

6. ISSUED BY CODE

NASA/Goddard Space Flight Center
Donna Broderick, Code 210.4
Greenbelt, MD 20771

7. ADMINISTERED BY *(If other than Item 6)* CODE

8. NAME AND ADDRESS OF CONTRACTOR *(No. Street, county, State and ZIP: Code)*

Lockheed Martin Government Services, Inc..
Attention: Ms. Martha Knox
7375 Executive Place
Seabrook, MD 20706

CODE FACILITY CODE

(✓) 9A. AMENDMENT OF SOLICITATION NO.

9B. DATED *(SEE ITEM 11)*

10A. MODIFICATION OF CONTRACT/ORDER NO. NAS5-98145

10B. DATED *(SEE ITEM 13)* June 22, 1998

11. THIS ITEM ONLY APPLIES TO AMENDMENTS OF SOLICITATIONS

☐ The above numbered solicitation is amended as set forth in Item 14. The hour and date specified for receipt of Offers ☐ is extended, ☐ is not extended.

Offers must acknowledge receipt of this amendment prior to the hour and date specified in the solicitation or as amended, by one of the following methods:

(a) By completing Items 8 and 15, and returning one (1) copy of the amendment; (b) By acknowledging receipt of this amendment on each copy of the offer submitted; or (c) By separate letter or telegram which includes a reference to the solicitation and amendment numbers. FAILURE OF YOUR ACKNOWLEDGMENT TO BE RECEIVED AT THE PLACE DESIGNATED FOR THE RECEIPT OF OFFERS PRIOR TO THE HOUR AND DATA SPECIFIED MAY RESULT IN REJECTION OF YOUR OFFER. If by virtue of this amendment you desire to change an offer already submitted, such change may be made by telegram or letter, provided each telegram or letter makes reference to the solicitation and this amendment, and is received prior to the opening hour and data specified.

12. ACCOUNTING AND APPROPRIATION DATA *(If required)*

B/NC: GWT PPC: BX

13. THIS ITEM APPLIES ONLY TO MODIFICATIONS OF CONTRACTS/ORDERS, IT MODIFIES THE CONTRACT/ORDER NO. AS DESCRIBED IN ITEM 14.

(✓) A. THIS CHANGE ORDER IS ISSUED PURSUANT TO: *(Specify authority)* THE CHANGES SET FORTH IN ITEM 14 ARE MADE IN THE CONTRACT ORDER NO. IN ITEM 10A.

B. THE ABOVE NUMBERED CONTRACT/ORDER IS MODIFIED TO REFLECT THE ADMINISTRATIVE CHANGES *(such as changes in paying office, appropriation date, etc.)* SET FORTH IN ITEM 14, PURSUANT TO THE AUTHORITY OF FAR 43.103(b).

C. THIS SUPPLEMENTAL AGREEMENT IS ENTERED INTO PURSUANT TO AUTHORITY OF:

X D. OTHER Specify type of modification and authority)
52.212-4, Contract Terms and Conditions – Commercial Items, paragraph (C) , Changes

E. IMPORTANT: Contractor ☐ is not, ☒ is required to sign this document and return __3__ copies to the issuing office.

14. DESCRIPTION OF AMENDMENT/MODIFICATION *(Organized by UCF section headings, including solicitation/contract subject matter where feasible.)*

The purpose of this modification is to: 1. Revise A.1.4 AUTHORIZED APPROVING OFFICIALS; A.1.8 RETAINAGE POOLS; F1.1.1 LEVEL 1 METRICS; ATTACHMENT J – DD254. 2. Add A.1.43 ELECTRONIC INFORMATION TECHNOLOGY STANDARDS; A.1.44 COMPUTER/ELECTRONIC ACCOMMODATIONS PROPGRAM (CAP) SUPPORT. 3. Administratively revise CSOC to UNITes.

Accordingly see the attached pages:

Except at provided herein, all terms and conditions of the document referenced in Item 9A or 10A, as heretofore changed, remains unchanged and in full force and effect.

15A. NAME AND TITLE OF SIGNER *(Type or print)*		16A. NAME AND TITLE OF CONTRACTING OFFICER *(Type or print)*	
Martha Knox Contracts Manager		Donna J. Broderick	
15B. CONTRACTOR/OFFEROR	15C. DATE SIGNED	16B. UNITED STATES OF AMERICA	16C. DATE SIGNED
Martha E. Knox *(Signature of person authorized to sign)*	7/14/06	BY Donna J Broderick *(Signature of Contracting Officer)*	8/10/06

RELEASED - Printed documents may be obsolete; validate prior to use.

The following lists the indicated changes:

1. Delete A.1.4 AUTHORIZED APPROVING OFFICIALS, (a), and replace in its entirety as follows:

   Only the GSFC Contracting Officer is authorized to unilaterally and bilaterally modify any contract terms and conditions, and to issue contract modifications in accordance with 52.212-4(c).

2. Delete A.1.4 AUTHORIZED APPROVING OFFICIALS, (b) in its entirety and replace in its entirety as follows:

   Each Center shall have a Delivery Order Contracting Officer who is authorized to issue and modify any delivery orders for their respective centers in accordance with 52.212-4(c).

3. Delete A.1.8 RETAINAGE POOLS, (a) and (b) in their entirety and replace adding text as indicated by the bolded text as follows:

   (a) A Performance Retainage Pool (PRP) will be established for each contractor comprised of 3% of the sum of the monthly seat/system prices from all delivery orders and modifications issued to that contractor. Multiple pools will be established for any contractor holding multiple delivery orders. These funds will be retained by the Government to ensure the successful implementation and operation of the ODIN Operating Model, as described in Section C.4 of the SOW. In specific, this PRP will help ensure contractor coordination and cooperation to achieve the interoperability objectives of ODIN. The PRP will be available for initial disbursement on the yearly anniversary date of the delivery order, and semi annually thereafter, at the sole discretion of the Program Manager. **For follow-on delivery orders, initial disbursement may occur on the 6 month anniversary date of the delivery order and semi-annually thereafter, at the sole discretion of the Program Manager.** The PRP decision shall be made on either a meets/fails-to-meet (all or nothing) basis, or on a discretionary (i.e. all, partial, or none) basis defined in each delivery order. In either case, any amount not authorized for disbursal, will not be carried forward and the delivery order will be unilaterally modified to decrease the order dollar amount. The manner and degree to which the Contractor demonstrably assumes joint and mutual responsibility for integration testing to ensure interoperability and functionality, as well as compliance with Agency and Center IT standards and architecture will be a major determinant in whether the PRP is released. The Contractor's efficacy in selection of systems, products, and services shall also be a factor. The

RELEASED - Printed documents may be obsolete; validate prior to use.

Contractor's approach and manner in coordinating their system, product and service roll outs with the other ODIN contractors to assure interoperability and functionality requirements are not compromised, will also be considered in determining the release of the PRP.

(b) A Metric Performance Retainage Pool (MPRP) will be established for each contractor. The MPRP will be comprised of 1% of the sum of the monthly seat/system prices from all delivery orders and modifications (not including catalog items) issued to that contractor; this MPRP will become available for disbursement after the first 180 days of performance. The first six months MPRP will only be disbursed if a successful performance has been demonstrated, as determined by the DOCOTR. Multiple pools will be established for any contractor holding multiple delivery orders. These funds will be retained by the Government to ensure the successful performance and operation as defined by the ODIN metrics specified in Attachment F. Each MPRP assessment will be made at the sole discretion of the DOCOTR on the monthly anniversary date of the delivery order. **For follow-on delivery orders the initial disbursement may occur after 30 days of performance and each MPRP assessment may be made on the monthly anniversary date of the delivery order at the sole discretion of the Program Manager.** The MPRP criteria shall be documented in the delivery order using one of the following approaches:

(1) Meets/fails-to-meet (all or nothing) - all three Level 1 metrics must be achieved in order for the MPRP to be disbursed.

(2) Discretionary basis (i.e., all, partial, or none) - MPRP disbursement may be established to distribute funds based on achieving one or more of the Level 1 metrics.

Upon notification, the Contractor may invoice the Government for payment. If not authorized for disbursal, the previous monthly MPRP, or any portion of, will not be carried forward and the delivery order will be unilaterally modified to decrease the order dollar amount. The manner and degree to which the Contractor demonstrably delivers services that meet the Level 1 metrics will form the basis for the MPRP disbursement decision.

c) The Government shall use this provision in lieu of requiring reperformance of services as provided for in paragraph (a) of 52.212-4.

RELEASED - Printed documents may be obsolete; validate prior to use.

4. Add the following to ADDENDUM 1, SCHEDULE AND ADDITIONAL PROVISIONS:

A.1.43 ELECTRONIC INFORMATION TECHNOLOGY (EIT) STANDARDS

Subpart B -- Technical Standards

§ 1194.21 Software applications and operating systems.

(a) When software is designed to run on a system that has a keyboard, product functions shall be executable from a keyboard where the function itself or the result of performing a function can be discerned textually.

(b) Applications shall not disrupt or disable activated features of other products that are identified as accessibility features, where those features are developed and documented according to industry standards. Applications also shall not disrupt or disable activated features of any operating system that are identified as accessibility features where the application programming interface for those accessibility features has been documented by the manufacturer of the operating system and is available to the product developer.

(c) A well-defined on-screen indication of the current focus shall be provided that moves among interactive interface elements as the input focus changes. The focus shall be programmatically exposed so that assistive technology can track focus and focus changes.

(d) Sufficient information about a user interface element including the identity, operation and state of the element shall be available to assistive technology. When an image represents a program element, the information conveyed by the image must also be available in text.

(e) When bitmap images are used to identify controls, status indicators, or other programmatic elements, the meaning assigned to those images shall be consistent throughout an application's performance.

(f) Textual information shall be provided through operating system functions for displaying text. The minimum information that shall be made available is text content, text input caret location, and text attributes.

(g) Applications shall not override user selected contrast and color selections and other individual display attributes.

RELEASED - Printed documents may be obsolete; validate prior to use.

(h) When animation is displayed, the information shall be displayable in at least one non-animated presentation mode at the option of the user.

(i) Color coding shall not be used as the only means of conveying information, indicating an action, prompting a response, or distinguishing a visual element.

(j) When a product permits a user to adjust color and contrast settings, a variety of color selections capable of producing a range of contrast levels shall be provided.

(k) Software shall not use flashing or blinking text, objects, or other elements having a flash or blink frequency greater than 2 Hz and lower than 55 Hz.

(l) When electronic forms are used, the form shall allow people using assistive technology to access the information, field elements, and functionality required for completion and submission of the form, including all directions and cues.

§ 1194.22 Web-based intranet and internet information and applications.

(a) A text equivalent for every non-text element shall be provided (e.g., via "alt", "longdesc", or in element content).

(b) Equivalent alternatives for any multimedia presentation shall be synchronized with the presentation.

(c) Web pages shall be designed so that all information conveyed with color is also available without color, for example from context or markup.

(d) Documents shall be organized so they are readable without requiring an associated style sheet.

(e) Redundant text links shall be provided for each active region of a server-side image map.

(f) Client-side image maps shall be provided instead of server-side image maps except where the regions cannot be defined with an available geometric shape.

(g) Row and column headers shall be identified for data tables.

(h) Markup shall be used to associate data cells and header cells for data tables that have two or more logical levels of row or column headers.

RELEASED - Printed documents may be obsolete; validate prior to use.

(i) Frames shall be titled with text that facilitates frame identification and navigation.

(j) Pages shall be designed to avoid causing the screen to flicker with a frequency greater than 2 Hz and lower than 55 Hz.

(k) A text-only page, with equivalent information or functionality, shall be provided to make a web site comply with the provisions of this part, when compliance cannot be accomplished in any other way. The content of the text-only page shall be updated whenever the primary page changes.

(l) When pages utilize scripting languages to display content, or to create interface elements, the information provided by the script shall be identified with functional text that can be read by assistive technology.

(m) When a web page requires that an applet, plug-in or other application be present on the client system to interpret page content, the page must provide a link to a plug-in or applet that complies with §1194.21(a) through (l).

(n) When electronic forms are designed to be completed on-line, the form shall allow people using assistive technology to access the information, field elements, and functionality required for completion and submission of the form, including all directions and cues.

(o) A method shall be provided that permits users to skip repetitive navigation links.

(p) When a timed response is required, the user shall be alerted and given sufficient time to indicate more time is required.

Note to §1194.22: 1. The Board interprets paragraphs (a) through (k) of this section as consistent with the following priority 1 Checkpoints of the Web Content Accessibility Guidelines 1.0 (WCAG 1.0) (May 5, 1999) published by the Web Accessibility Initiative of the World Wide Web Consortium:

RELEASED - Printed documents may be obsolete; validate prior to use.

n 1194.22 Paragraph	1.0 Checkpoint
(a)	1.1
(b)	1.4
(c)	2.1
(d)	6.1
(e)	1.2
(f)	9.1
(g)	5.1
(h)	5.2
(i)	12.1
(j)	7.1
(k)	11.4

2. Paragraphs (l), (m), (n), (o), and (p) of this section are different from WCAG 1.0. Web pages that conform to WCAG 1.0, level A (i.e., all priority 1 checkpoints) must also meet paragraphs (l), (m), (n), (o), and (p) of this section to comply with this section. WCAG 1.0 is available at **http://www.w3.org/TR/1999/WAI-WEBCONTENT-19990505**.

§ 1194.23 Telecommunications products.

(a) Telecommunications products or systems which provide a function allowing voice communication and which do not themselves provide a TTY functionality shall provide a standard non-acoustic connection point for TTYs. Microphones shall be capable of being turned on and off to allow the user to intermix speech with TTY use.

(b) Telecommunications products which include voice communication functionality shall support all commonly used cross-manufacturer non-proprietary standard TTY signal protocols.

(c) Voice mail, auto-attendant, and interactive voice response telecommunications systems shall be usable by TTY users with their TTYs.

(d) Voice mail, messaging, auto-attendant, and interactive voice response telecommunications systems that require a response from a user within a time interval, shall give an alert when the time interval is about to run out, and shall provide sufficient time for the user to indicate more time is required.

(e) Where provided, caller identification and similar telecommunications functions shall also be available for users of TTYs, and for users who cannot see displays.

RELEASED - Printed documents may be obsolete; validate prior to use.

(f) For transmitted voice signals, telecommunications products shall provide a gain adjustable up to a minimum of 20 dB. For incremental volume control, at least one intermediate step of 12 dB of gain shall be provided.

(g) If the telecommunications product allows a user to adjust the receive volume, a function shall be provided to automatically reset the volume to the default level after every use.

(h) Where a telecommunications product delivers output by an audio transducer which is normally held up to the ear, a means for effective magnetic wireless coupling to hearing technologies shall be provided.

(i) Interference to hearing technologies (including hearing aids, cochlear implants, and assistive listening devices) shall be reduced to the lowest possible level that allows a user of hearing technologies to utilize the telecommunications product.

(j) Products that transmit or conduct information or communication, shall pass through cross-manufacturer, non-proprietary, industry-standard codes, translation protocols, formats or other information necessary to provide the information or communication in a usable format. Technologies which use encoding, signal compression, format transformation, or similar techniques shall not remove information needed for access or shall restore it upon delivery.

(k) Products which have mechanically operated controls or keys, shall comply with the following:

(1) Controls and keys shall be tactilely discernible without activating the controls or keys.

(2) Controls and keys shall be operable with one hand and shall not require tight grasping, pinching, or twisting of the wrist. The force required to activate controls and keys shall be 5 lbs. (22.2 N) maximum.

(3) If key repeat is supported, the delay before repeat shall be adjustable to at least 2 seconds. Key repeat rate shall be adjustable to 2 seconds per character.

(4) The status of all locking or toggle controls or keys shall be visually discernible, and discernible either through touch or sound.

RELEASED - Printed documents may be obsolete; validate prior to use.

§ 1194.24 Video and multimedia products.

(a) All analog television displays 13 inches and larger, and computer equipment that includes analog television receiver or display circuitry, shall be equipped with caption decoder circuitry which appropriately receives, decodes, and displays closed captions from broadcast, cable, videotape, and DVD signals. As soon as practicable, but not later than July 1, 2002, widescreen digital television (DTV) displays measuring at least 7.8 inches vertically, DTV sets with conventional displays measuring at least 13 inches vertically, and stand-alone DTV tuners, whether or not they are marketed with display screens, and computer equipment that includes DTV receiver or display circuitry, shall be equipped with caption decoder circuitry which appropriately receives, decodes, and displays closed captions from broadcast, cable, videotape, and DVD signals.

(b) Television tuners, including tuner cards for use in computers, shall be equipped with secondary audio program playback circuitry.

(c) All training and informational video and multimedia productions which support the agency's mission, regardless of format, that contain speech or other audio information necessary for the comprehension of the content, shall be open or closed captioned.

(d) All training and informational video and multimedia productions which support the agency's mission, regardless of format, that contain visual information necessary for the comprehension of the content, shall be audio described.

(e) Display or presentation of alternate text presentation or audio descriptions shall be user-selectable unless permanent.

§ 1194.25 Self contained, closed products.

(a) Self contained products shall be usable by people with disabilities without requiring an end-user to attach assistive technology to the product. Personal headsets for private listening are not assistive technology.

(b) When a timed response is required, the user shall be alerted and given sufficient time to indicate more time is required.

(c) Where a product utilizes touchscreens or contact-sensitive controls, an input method shall be provided that complies with §1194.23 (k) (1) through (4).

RELEASED - Printed documents may be obsolete; validate prior to use.

(d) When biometric forms of user identification or control are used, an alternative form of identification or activation, which does not require the user to possess particular biological characteristics, shall also be provided.

(e) When products provide auditory output, the audio signal shall be provided at a standard signal level through an industry standard connector that will allow for private listening. The product must provide the ability to interrupt, pause, and restart the audio at anytime.

(f) When products deliver voice output in a public area, incremental volume control shall be provided with output amplification up to a level of at least 65 dB. Where the ambient noise level of the environment is above 45 dB, a volume gain of at least 20 dB above the ambient level shall be user selectable. A function shall be provided to automatically reset the volume to the default level after every use.

(g) Color coding shall not be used as the only means of conveying information, indicating an action, prompting a response, or distinguishing a visual element.

(h) When a product permits a user to adjust color and contrast settings, a range of color selections capable of producing a variety of contrast levels shall be provided.

(i) Products shall be designed to avoid causing the screen to flicker with a frequency greater than 2 Hz and lower than 55 Hz.

(j) Products which are freestanding, non-portable, and intended to be used in one location and which have operable controls shall comply with the following:

(1) The position of any operable control shall be determined with respect to a vertical plane, which is 48 inches in length, centered on the operable control, and at the maximum protrusion of the product within the 48 inch length (see Figure 1 of this part).

RELEASED - Printed documents may be obsolete; validate prior to use.

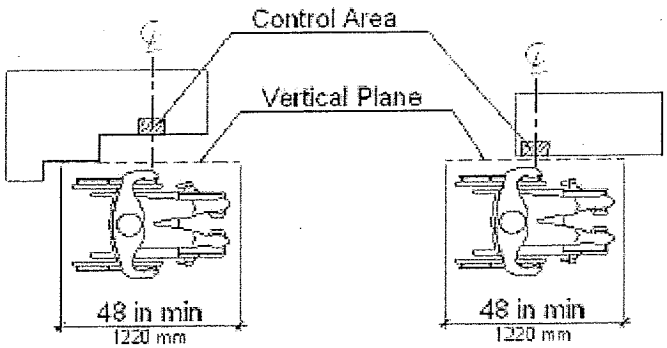

Vertical Plane Relative to the Operable Control

Figure 1

(2) Where any operable control is 10 inches or less behind the reference plane, the height shall be 54 inches maximum and 15 inches minimum above the floor.

(3) Where any operable control is more than 10 inches and not more than 24 inches behind the reference plane, the height shall be 46 inches maximum and 15 inches minimum above the floor.

(4) Operable controls shall not be more than 24 inches behind the reference plane (see Figure 2 of this part).

RELEASED - Printed documents may be obsolete; validate prior to use.

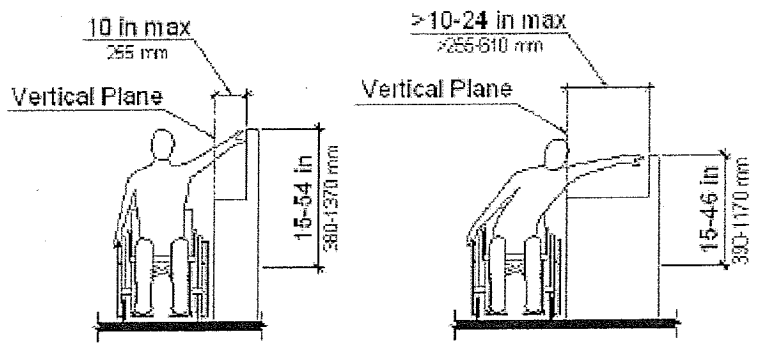

Height of Operable Control Relative to the Vertical Plane

Figure 2

§ 1194.26 Desktop and portable computers.

(a) All mechanically operated controls and keys shall comply with §1194.23 (k) (1) through(4).

(b) If a product utilizes touchscreens or touch-operated controls, an input method shall be provided that complies with §1194.23 (k) (1) through (4).

(c) When biometric forms of user identification or control are used, an alternative form of identification or activation, which does not require the user to possess particular biological characteristics, shall also be provided.

(d) Where provided, at least one of each type of expansion slots, ports and connectors shall comply with publicly available industry standards.

Subpart C -- Functional Performance Criteria

§ 1194.31 Functional performance criteria.

(a) At least one mode of operation and information retrieval that does not require user vision shall be provided, or support for assistive technology used by people who are blind or visually impaired shall be provided.

RELEASED - Printed documents may be obsolete; validate prior to use.

(b) At least one mode of operation and information retrieval that does not require visual acuity greater than 20/70 shall be provided in audio and enlarged print output working together or independently, or support for assistive technology used by people who are visually impaired shall be provided.

(c) At least one mode of operation and information retrieval that does not require user hearing shall be provided, or support for assistive technology used by people who are deaf or hard of hearing shall be provided.

(d) Where audio information is important for the use of a product, at least one mode of operation and information retrieval shall be provided in an enhanced auditory fashion, or support for assistive hearing devices shall be provided.

(e) At least one mode of operation and information retrieval that does not require user speech shall be provided, or support for assistive technology used by people with disabilities shall be provided.

(f) At least one mode of operation and information retrieval that does not require fine motor control or simultaneous actions and that is operable with limited reach and strength shall be provided.

Subpart D -- Information, Documentation, and Support

§ 1194.41 Information, documentation, and support.

(a) Product support documentation provided to end-users shall be made available in alternate formats upon request, at no additional charge.

(b) End-users shall have access to a description of the accessibility and compatibility features of products in alternate formats or alternate methods upon request, at no additional charge.

(c) Support services for products shall accommodate the communication needs of end-users with disabilities.

RELEASED - Printed documents may be obsolete; validate prior to use.

5. Add the following to ADDENDUM 1, SCHEDULE AND ADDITIONAL PROVISIONS:

A.1.44 COMPUTER/ELECTRONIC ACCOMMODATIONS PROGRAM (CAP)
SUPPORT

The ODIN Contractor shall support NASA employees in obtaining assistive technology in accordance with the Computer/Electronic Accommodations Program (CAP), a partnership between NASA and the Department of Defense.

The ODIN responsibilities are as follows:

a. For users that currently have an ODIN desktop seat, the ODIN Contractor shall participate with CAP in identifying products that meet the users' needs and ensuring that they are compatible with the ODIN seat. CAP shall acquire and deliver the products to the user, or, if preferred, the ODIN Contractor.

b. If the service is ordered from the ODIN catalog, the ODIN Contractor shall install and set-up the products on users' seats. This includes making software changes to accommodate the CAP products. Any hardware or software items acquired through CAP and installed on the user's seat become the new supported system baseline for that seat.

c. The CAP products would be considered Government furnished property under the ODIN Delivery Order. The ODIN Contractor shall manage the CAP products in the same manner as other Government furnished property under their contract.

d. The ODIN Contractor shall be responsible for any necessary registering of the assistive technology after it is installed in the user's seat.

e. If maintenance support service is ordered from the ODIN catalog, the ODIN Contractor shall also be responsible for all maintenance and repair of the CAP product. However, this does not include replacement due to breakage or incompatibility with subsequent ODIN technology. Replacement products will be obtained through the CAP.

f. CAP will be responsible for any needed user training.

RELEASED - Printed documents may be obsolete; validate prior to use.

6. Delete F.1.1 LEVEL 1 METRICS in its entirety and replace adding text as indicated by the bolded text as follows:

   The Contractor shall meet or exceed the metrics specified in Level 1 Metrics Table F.1.1. for each classification of ODIN seat/system. The Contractor shall calculate and report service delivery, availability, and customer satisfaction metrics for each functional area listed in Table F.1.1 monthly to each Center according to DRD 2. The Contractor shall use the same information to create and report quarterly and annual rollups. Desktop User Services availability percentage is calculated based on outages for ODIN provided services accessed through desktop seats. This includes Desktop Seats, Server Services, LAN Interface Services, **VTM Services,** and Remote Communication Services. These metrics shall be made available to the Government or its agents.

7. ADDENDUM 2 LIST OF ATTACHMENTS, ATTACHMENT J DD 254, delete in its entirety and replace with the DD254 shown as Enclosure 1.

8. Globally replace CSOC through out the Contract and all Attachments to read as follows: UNITeS

9. Globally replace Consolidated Space Operations Contract through out the Contract and all Attachments to read as follows: Unified NASA Information Technology Services

All other terms and conditions of this delivery order remain unchanged.

RELEASED - Printed documents may be obsolete; validate prior to use.

ATTACHMENT 1
NAS5-98145
MODIFICATION 18

RELEASED - Printed documents may be obsolete; validate prior to use.

8. ACTUAL PERFORMANCE

NASA GSFC, Greenbelt, MD and Wallops Island, VA
NASA LaRC, Hampton, VA
NASA DFRC, Edwards, CA
NASA Independent Verification and Validation (IV&V) Facility
(Virtual Team Meeting Seat), Fairmont, West Virginia
NASA Headquarters, Washington, DC
NASA GRC, Cleveland, OH
NASA ARC, Moffett Field, CA

RELEASED - Printed documents may be obsolete; validate prior to use.